Art Applewhite Rockets

from deep in the heart of Texas

BETA - 75 mm Stealth

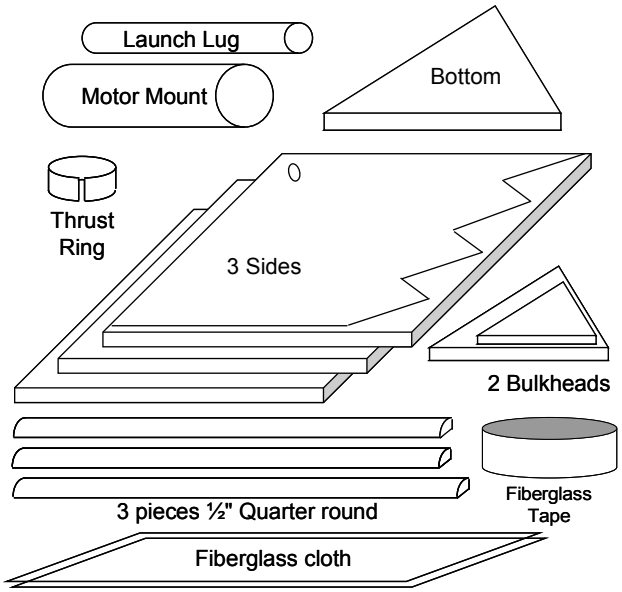

Height – 31 inches
Span – 41 inches
Weight – 88 oz

Parts List
3 SIDEs & BOTTOM – 1/2" foam-backed board
3 x 1/2" quarter round
75 mm LOC Precision motor mount tube
75 mm LOC Precision Thrust Ring
38 mm LOC Precision Launch Lug
3/8" plywood Forward Bulkhead
1/2" plywood Aft Bulkhead
1 Roll self-adhesive fiberglass drywall tape
4 oz. Fiberglass cloth
1 - 3 inch Hose clamp

Recommended motors: Aerotech L850W or M1297W

Tools and supplies needed
Craft knife, Elmer's Glue-All®, West Systems 105 Epoxy Resin and 206 Slow Hardener, sandpaper.

Please make sure all the parts in the Parts List are present. Contact rocket877@aol.com immediately if any parts are missing or damaged.

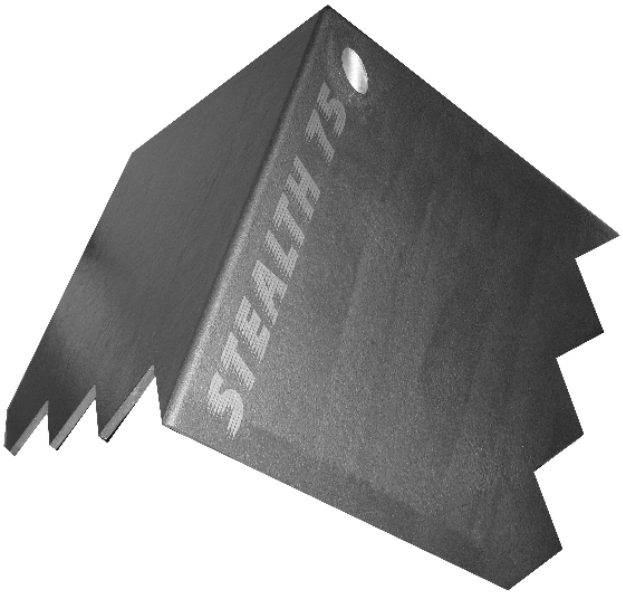

Tips:
- Read through the entire instructions before beginning
- Test fit all parts before gluing them.
- Work on a clean surface, in a well-lighted and well-ventilated area.
- Keep your hands clean and free of glue.

BETA - 75 mm Stealth - Page 2

Assembly

Note:Please test fit all parts before gluing them together.

1. Cut out the serrated edge of each SIDE. Make the cuts as cleanly and squarely as possible.
2. The Side with the Launch Lug hole marked is SIDE 1. On SIDE 1 carefully cut out the Inside and Outside Launch Lug Holes. Cut only through the posterboard layer but not into the foam. Remove the oval shaped cutouts.
3. Poke through the INSIDE LAUNCH ROD HOLE to the OUTSIDE LAUNCH ROD HOLE with something sharp. Carefully enlarge the hole until the 38 mm Launch Lug passes through it snugly at about a 36 degree angle.
4. Elmer's Glue-All or Carpenter's Glue can be used for this part of the assembly. Glue the 25.5" piece of quarter round to the edge of SIDE 1 (the side with the Launch Rod Hole) as shown in the picture. The Outside Launch Rod hole is shown outward. The quarter round should overhang on the left side by 1/2" and be even with the serrated edge.
5. Glue the 25" pieces of quarter round to SIDE 2 and SIDE 3, the ends of the quarter round should be even with edges of SIDEs.
6.

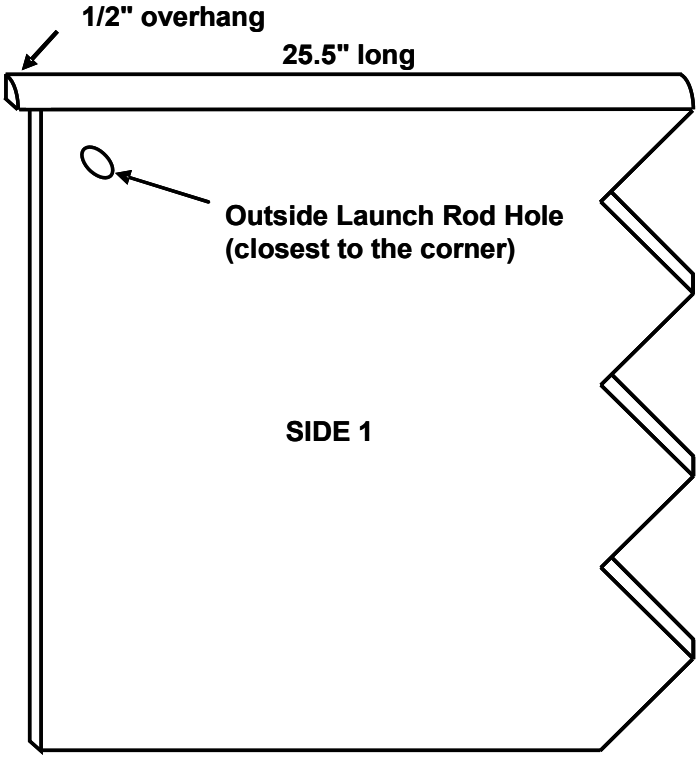

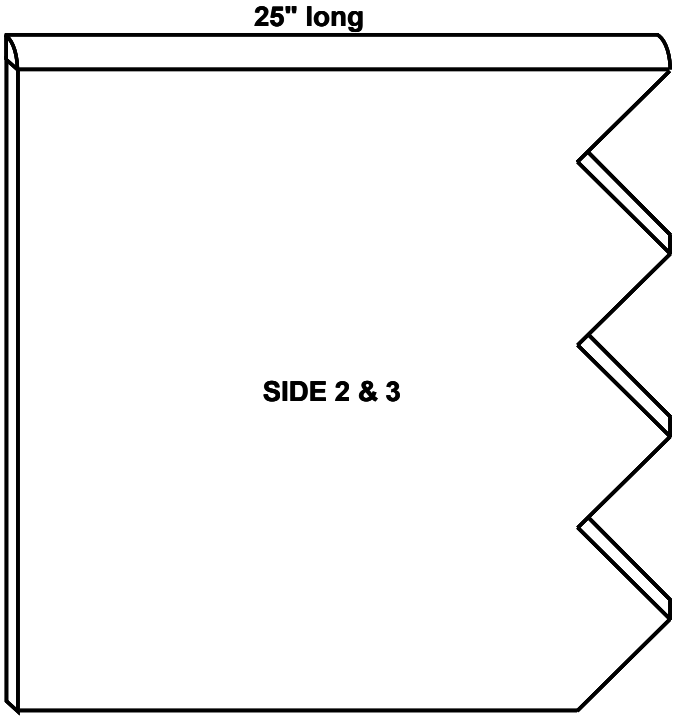

BETA - 75 mm Stealth - Page 3

7. Glue SIDE 1 to SIDE 2. Make sure the SIDES are at a 90 degrees to each other.
8. Glue SIDE 3 to SIDES 1 & 2. These assembled parts form what will now be called the TOP.
9. Lay FIBERGLASS TAPE on the inside joints of the TOP.
10. Add extra fiberglass tape at the inside apex of the TOP to provide reinforcement for the BULKHEAD.
11. Wet the fiberglass tape with epoxy and make a generous fillet of epoxy on all three inside joints.
12. Sand the quarter round at the outside tip of the TOP to blend the 3 rounded edges together.
13. Cut the triangular hole out of the center of the BOTTOM just big enough for the AFT BULKHEAD to fit.
14. Insert and glue the AFT BULKHEAD into the BOTTOM.
15. Place the Grey drywall tape over the seam between the the BOTTOM and the AFT BULKHEAD on the inside of the BOTTOM. Epoxy it to both the BOTTOM and the AFT BULKHEAD.
16. Once the epoxy is set, trim the tape out of MOTOR MOUNT and LAUNCH LUG holes and edges of the BOTTOM.

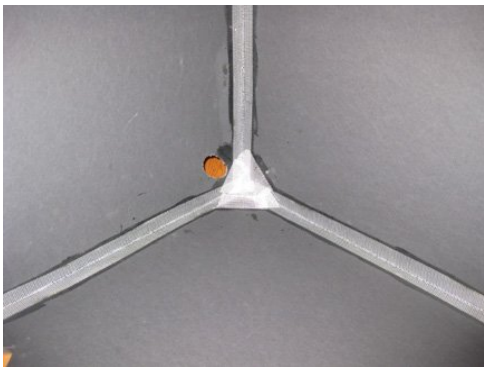

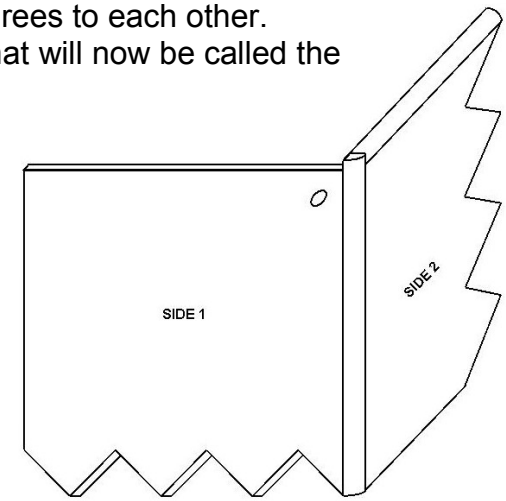

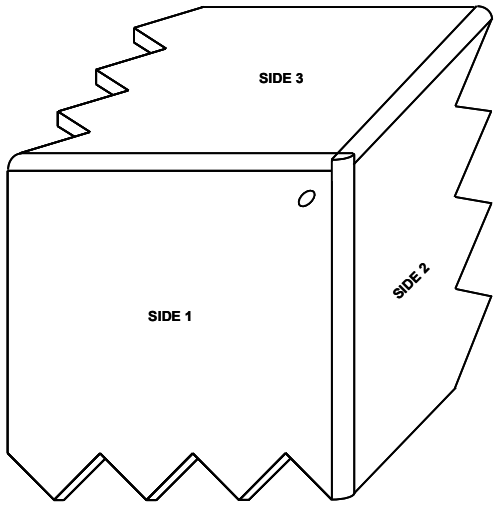

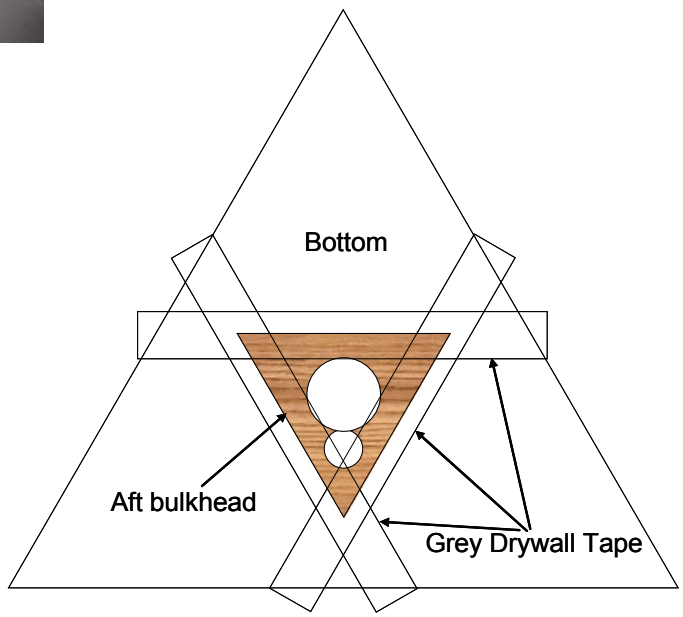

BETA - 75 mm Stealth - Page 4

17. Glue the THRUST RING (3/4" split 75 mm tube) inside and even with the forward end of the 75 mm MOTOR MOUNT. This will reinforce the motor mount and prevent the motor casing from damaging the FORWARD BULKHEAD.

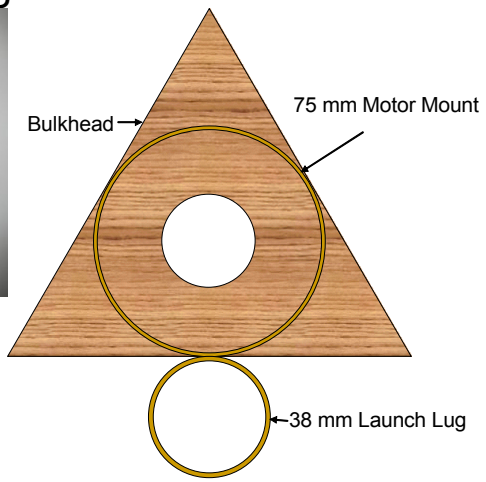

18. Bevel the sides of the FORWARD BULKHEAD so that it fits flat against the inside of the TOP. You will also need to round off the corners to match the epoxy fillets.
19. Center the forward end (the thrust ring end) of the 75 mm MOTOR MOUNT flat against the FORWARD BULKHEAD and glue them together.
20. Glue the 38 mm Launch Lug to the Motor Mount Tube so that the tubes are parallel and the 38 mm Launch Lug clears the bottom of the FORWARD BULKHEAD and extends 1 inch above it. Leave about 1” on the aft end without glue to allow the hose clamp, used for motor retention, to be installed later.

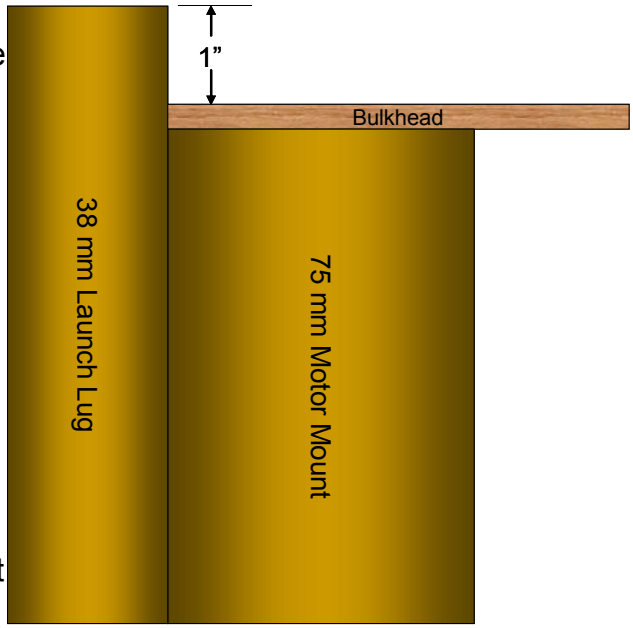

21. Test fit the BULKHEAD and LAUNCH LUG in the apex of the TOP. Test fit the BOTTOM over MOTOR MOUNT and into the TOP. Trim and sand the corners of the BOTTOM as necessary to get a good fit into the TOP.
22. Remove the BOTTOM and epoxy the FORWARD BULKHEAD into apex of the TOP. The 3 edges of the FORWARD BULKHEAD should be resting flat against the inside surface of all three SIDES. Without disturbing the placement of the BULKHEAD, slide the BOTTOM over the aft end of the MOTOR MOUNT. Make sure the LAUNCH ROD HOLE in the BOTTOM fits over the LAUNCH LUG. This will keep the MOTOR MOUNT centered while the epoxy sets.
23. Once the epoxy is set, trim the protruding part of the Launch Lug even with the outside slope of the TOP.

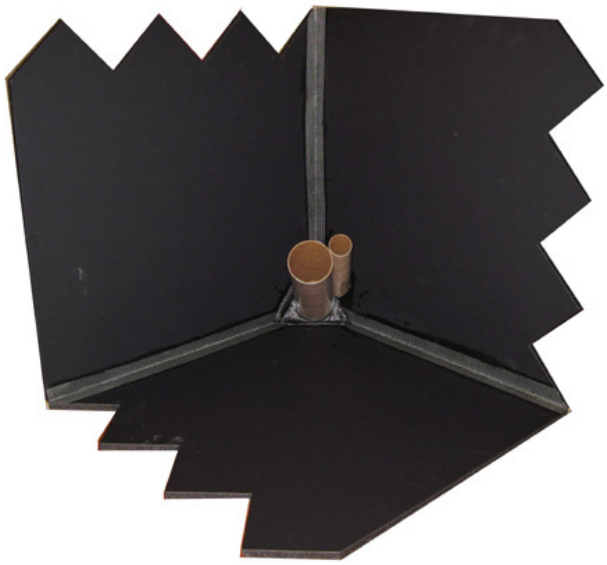

24. Put fiberglass drywall tape on the trailing edges of the foamboard, both the straight and serrated edges. Fold it over onto the Sides. This will keep the cardstock covering of the foamboard from separating from the foam when the Stealth spins rapidly during flight. Use a few drops of CA if necessary to temporarily hold the tape in place.
25. Cover the entire outside of the TOP with fiberglass cloth. Spread epoxy thinly and evenly over the cloth. **NOTE:** Do not wrap the cloth over the edges of the foamboard, let it stand out straight. Make sure the fiberglass cloth and drywall tape is completely wetted with the epoxy and lays flat against the foamboard. Do not use too much epoxy as this will only increase the weight of the finished rocket without improving its strength.
26. Once the epoxy is set, trim the fiberglass cloth even with the trailing edges.
27. Place the BOTTOM inside the TOP and glue it temporarily in place. Run fiberglass Drywall Tape along the joints between the BOTTOM and the TOP and put generous fillets of epoxy on all the joints.
28. Cover the entire BOTTOM and inside of the SIDES with fiberglass cloth and coat it with a thin film of epoxy.
29. Trim away the excess fiberglass cloth.

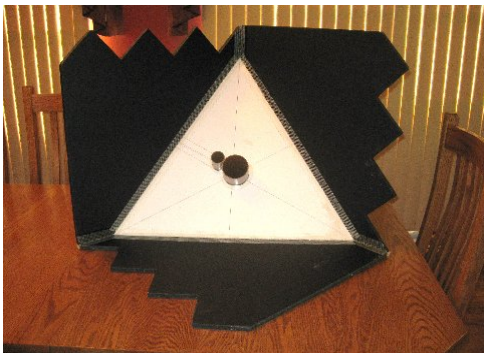

Launch Preparation:

Recommended motors: Aerotech L850W or M1297W

- Slide the motor into the MOTOR MOUNT as far forward as possible.
- Use a hose clamp to hold the motor securely.
- The motor should never extend below the bottom corners of the rocket. The practical limit for motor casing length is about 25".
- To avoid damage to the foamboard from the motor exhaust, support the rocket at least 12 inches above the blast deflector.
- Launch the 75mm Stealth off a standard 1" rail that is at least 6 feet long.

Phil Stephen with his 75mm Stealth at MWP VI

Thank you Phil for all your help in developing this kit.
Art Applewhite

Limitation of Liability: High power rockets (HPR) are not toys. They are functional rockets constructed of lightweight materials and launched using pre-manufactured, certified rocket motors in accordance with the HPR Rocket Safety Code. If misused, HPR can cause injury, property damage and even death. Art Applewhite Rockets certifies that it has exercised reasonable care in the design and manufacture of its products. Once sold, we cannot assume any liability for product storage, transportation or usage. Art Applewhite Rockets shall not be held responsible for any property damage or personal injury whatsoever arising from the handling, storage, use or misuse of our product. The buyer assumes all risks and liabilities there from and accepts and uses Art Applewhite Rockets products on these conditions